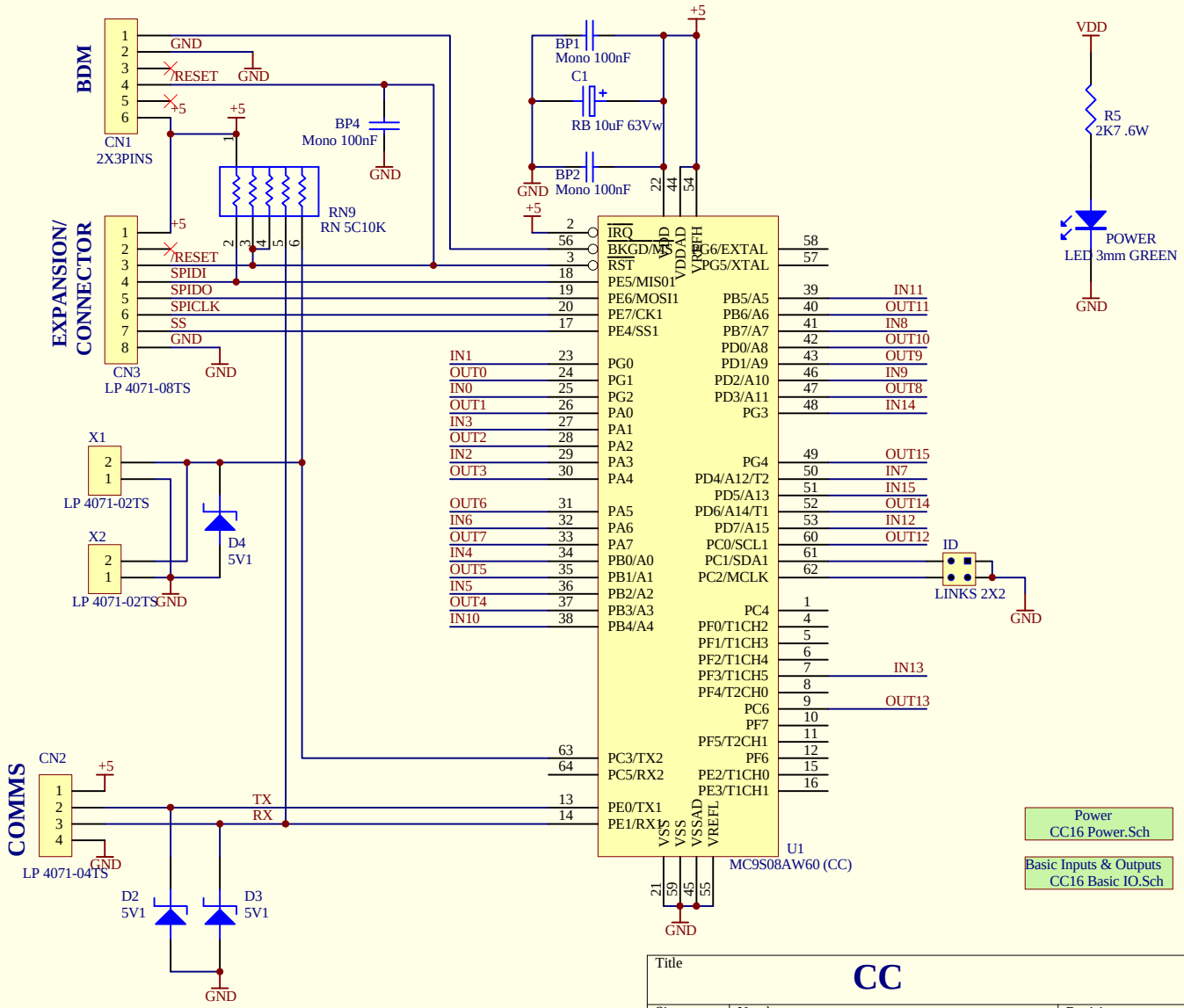

Title	**CC**	
Size: A4	Number: **uPROCESSOR, COMMS, 5V**	Revision: **1.0**
Date: 4-Dec-2006	Sheet1 of 6	
File: C:\Documents and Settings\Keith\My Documents\PSE\SPLat\CC16\CC16.ddb	Drawn by:	

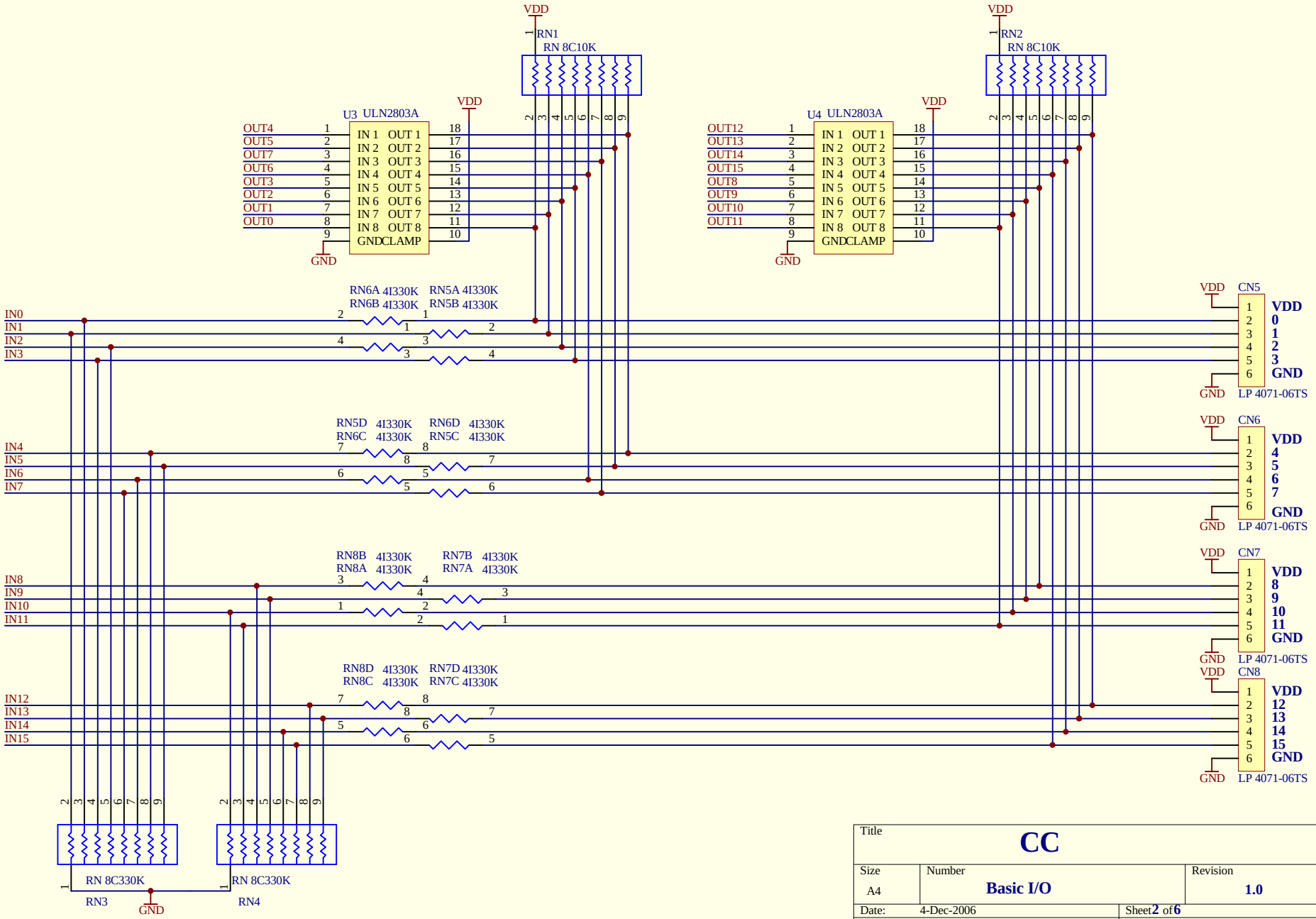

Title		
CC		
Size: A4	Number: **Basic I/O**	Revision: **1.0**
Date: 4-Dec-2006	Sheet **2** of **6**	
File: C:\Documents and Settings\Keith\My Documents\PSE\SPLat\CC16\CC16.ddb	Drawn by:	

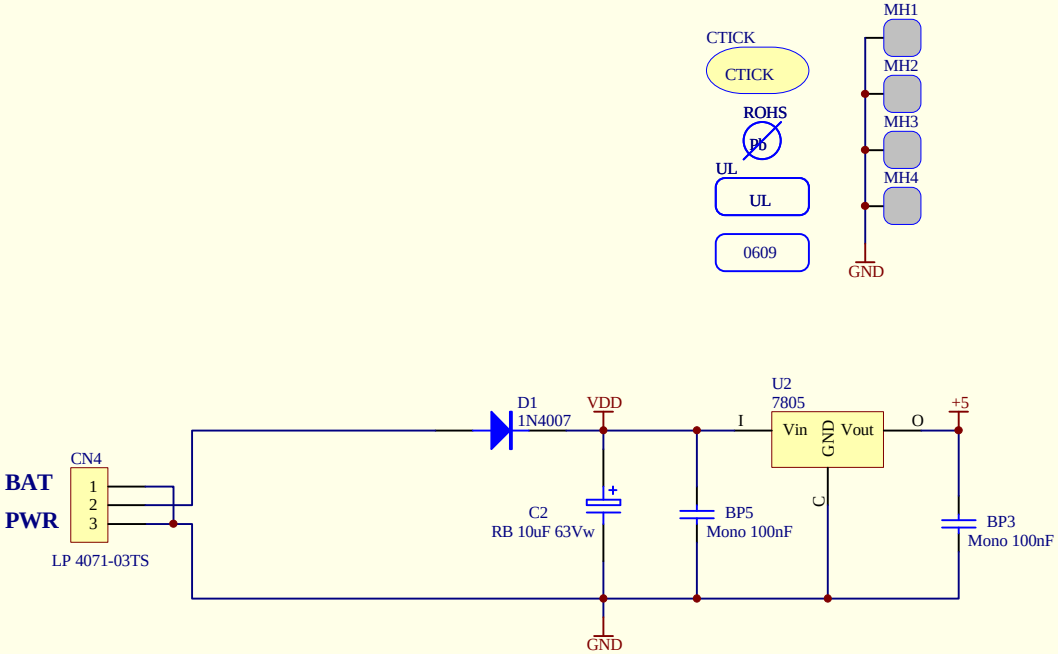

Title	**CC**	
Size A4	Number **Power**	Revision **1.0**
Date: 4-Dec-2006	Sheet **4** of **4**	
File: C:\Documents and Settings\Keith\My Documents\DSE\SPLat\CC16\CC16.ddb	Drawn by:	