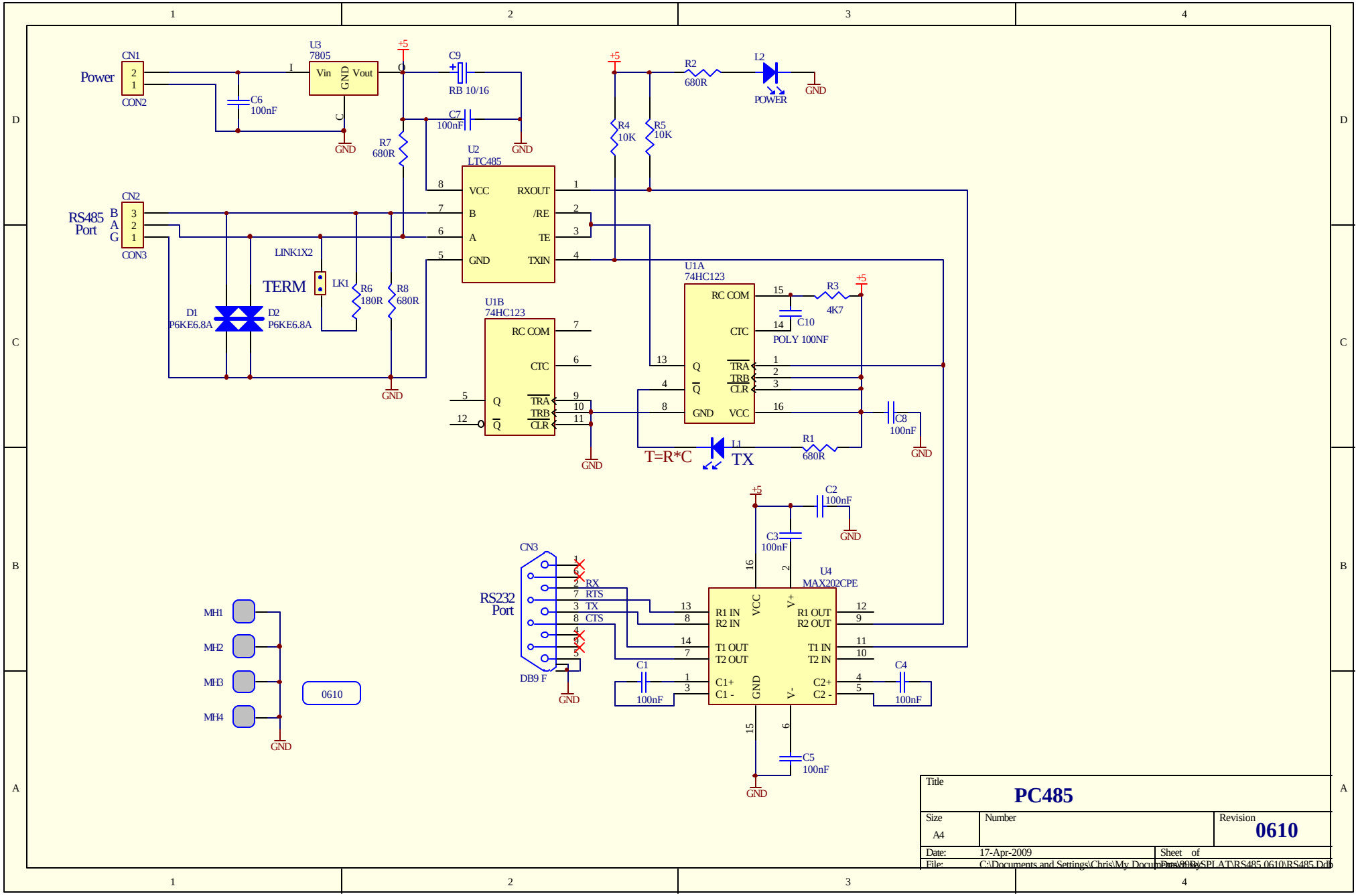
Power
CN1
CON2
C6
100nF
U3
7805
Vin
GND
Vout
+5
C9
RB 10/16
C7
100nF
GND
R7
680R
U2
LTC485
VCC
B
A
GND
RXOUT
/RE
TE
TXIN
R4
10K
R5
10K
R2
680R
L2
POWER
RS485
Port
CN2
CON3
LINK1X2
TERM
LK1
R6
180R
R8
680R
D1
P6KE6.8A
D2
P6KE6.8A
U1B
74HC123
RC COM
CTC
Q
TRA
TRB
CLR
U1A
74HC123
R3
4K7
C10
POLY 100NF
C8
100nF
R1
680R
T=R*C
L1
TX
C2
100nF
C3
100nF
CN3
RS232
Port
DB9 F
RX
RTS
TX
CTS
U4
MAX202CPE
R1 IN
R2 IN
T1 OUT
T2 OUT
C1+
C1 -
VCC
V+
GND
V-
R1 OUT
R2 OUT
T1 IN
T2 IN
C2+
C2 -
C1
100nF
C4
100nF
C5
100nF
MH1
MH2
MH3
MH4
0610
Title
PC485
Size
A4
Number
Revision
0610
Date:
17-Apr-2009
Sheet of
File:
C:\Documents and Settings\Chris\My Documents\99BySPLAT\RS485.0610\RS485.Ddb
Drawn By: